Building Guide

Colorado Chapter of the International Code Council

Single Family Residential Ramps

How to Use this Guide

Check with your jusrisdiction regarding type of submittal (paper or electronic) and additional requirements. Draw to scale and complete the following (*hint: use graph paper with ¼" squares. Example: ¼" = 1'*):

1 Complete this Building Guide by filling in the blanks on page three, and indicating which construction details will be used.

2 Provide Plot Plan (site plan) showing dimensions of your project and its relationship to existing buildings or structures on the property and the distance to existing property lines, drawn to scale. See page3.

3 Fill out a building permit application.

The majority of permit applications are processed with little delay. The submitted documents will help determine if the project is in compliance with building safety codes, zoning ordinances and other applicable laws.

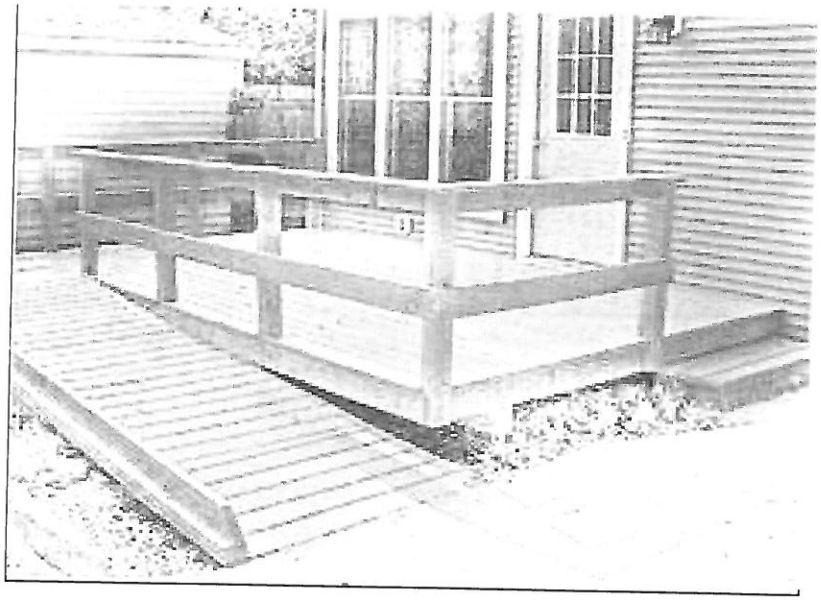

The Colorado Chapter of the International Code Council is a professional organization seeking to promote the public health, safety and welfare to building construction. We appreciate your feedback and suggestions. To obtain a master copy of this building guide, please write to the Colorado Chapter of the International Code Council, P.O. Box 961, Arvada, CO 80001.
http://www.coloradochaptericc.org

This handout was developed by the Colorado Chapter of the International Code Council as a basic plan submittal under the 2015 International Residential Code. It is not intended to cover all circumstances. Check with your Department of Building Safety for additional requirements.

Single Family Residential Ramps

Address:

Site Plan Example

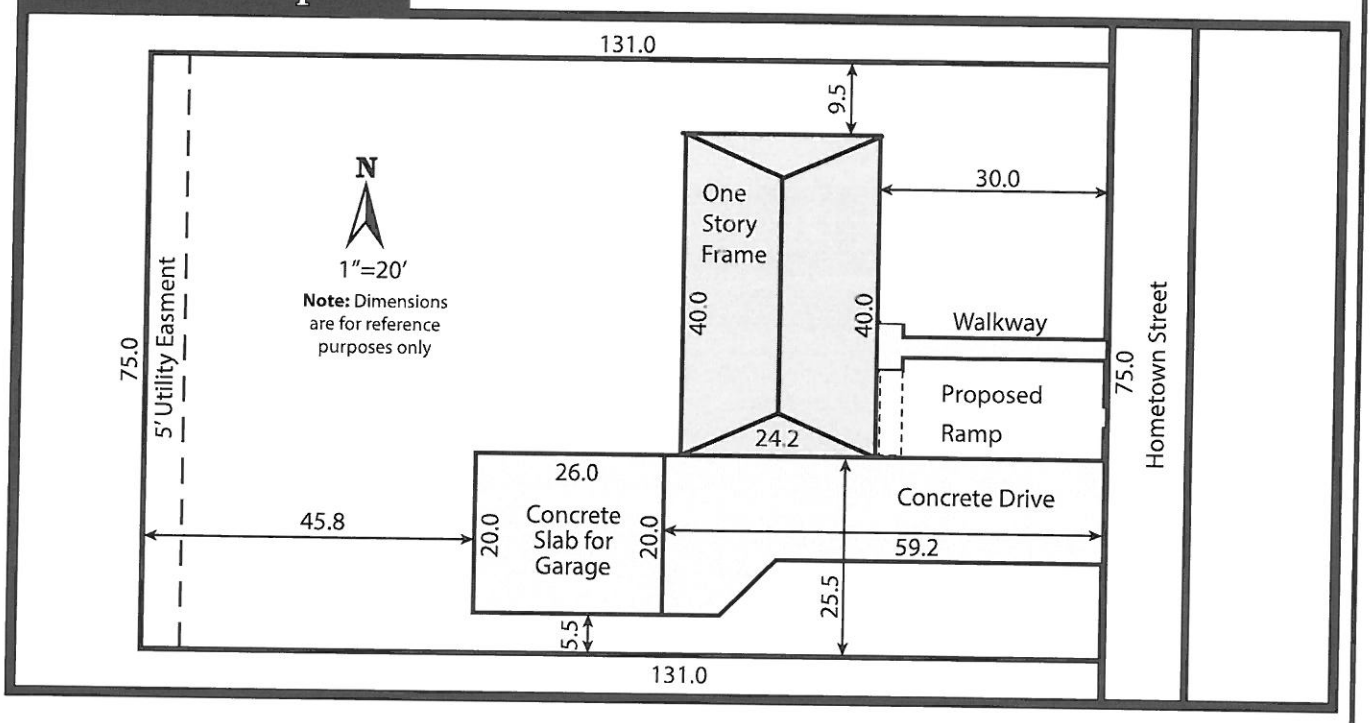

This guide can't be used to comply with Fair Housing, ADA or ICC A117.1-2009 requirements.

This handout was developed by the Colorado Chapter of the International Code Council as a basic plan submittal under the 2015 International Residential Code. It is not intended to cover all circumstances. Check with your Department of Building Safety for additional requirements.

Single Family Residential Ramps

Directions

- Submit two complete paper sets (or one electronically) of required information.
- Draw a floor plan with dimensions drawn to scale, showing the layout of the ramps
- Ramps work best for heights up to 30".
  A lift is a space saving option for heights over 30".
  Earth berms and re-grading can work for all grade heights.
- It is recommended that a maxium slope of 1:12 be used for the ramp.A slope 1:8 is useable for power chairs, scooters or if someone is pushed in a wheel chair.
- A landing is required at the top and bottom of each ramp section.
- Door width to enter the home is recommended to be 36" minimum
- Ramp width 36" recommended
- At least one handrail is required where the ramp slope is greater than 1:12
- Edge protection is necessary to prevent the wheels of a wheel chair from leaving the ramp surface or becoming lodged beetween the edge of the ramp and any adjacent construction
- Tempered glazing for windows adjacent to the ramp may be required and shall comply with section R308
- Plan on creating a slip resistant surface eg. some paints and decking products are slip resistant in all weather circumstances
- Prefabricated steel ramps are required to be installed per manufacturer's installation instructions including tie downs

Ramps Configuration

3' min long level,
5' minimum recommended landings

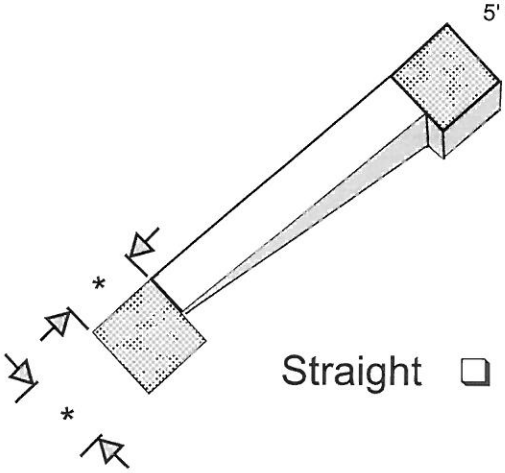

Straight ❑

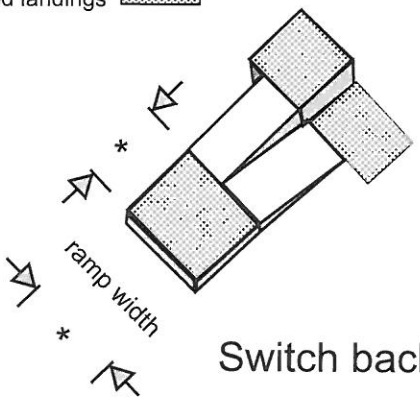

Switch back ❑

- IRC section 311.8.2 requires a 3' minimum ramp landing. At a landing a person on wheel chair or scooter needs at least 60 " to turn and adjust for the next rampo run, to move through a doorway at the top of landing or change direction at the bottom or to enter and leave the ramp.
- Thus a 3' minimum ramp is required, a 5' minimum landing is recommended

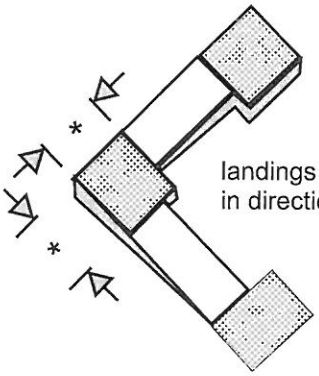

"L" Shaped ❑

This guide can't be used to comply with Fair Housing, ADA or ICC A117.1-2009 requirements.

This handout was developed by the Colorado Chapter of the International Code Council as a basic plan submittal under the 2015 International Residential Code. It is not intended to cover all circumstances. Check with your Department of Building Safety for additional requirements.

Single Family Residential Ramps

Detail A

Ramp section or landing exceeding 30 inches above ground ❑

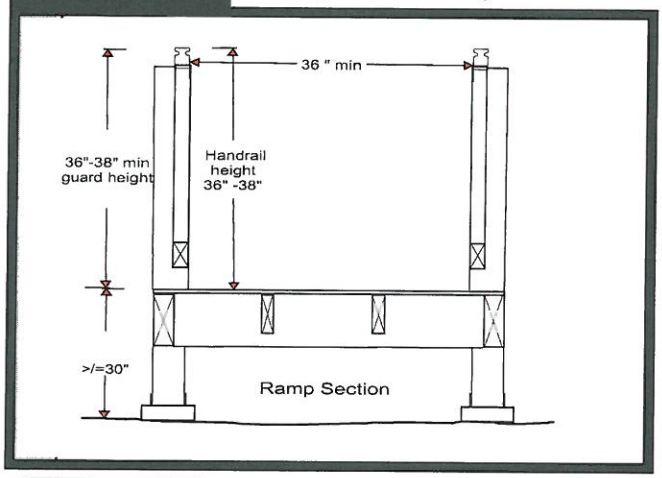

Detail A1

Ramp section or landing less than 30 inches above ground ❑

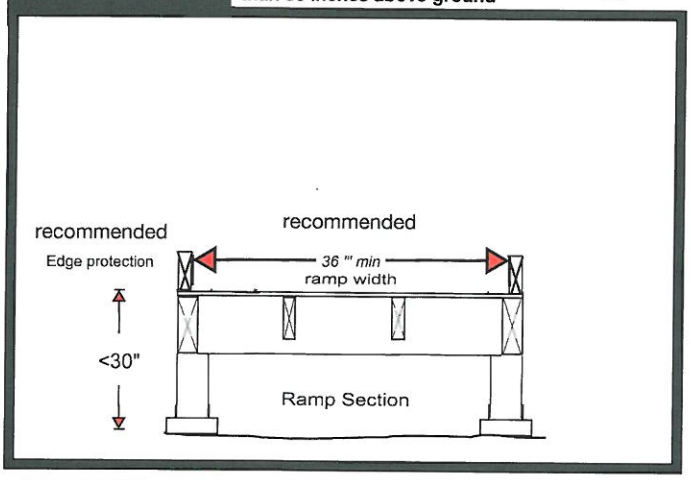

Detail B

❑

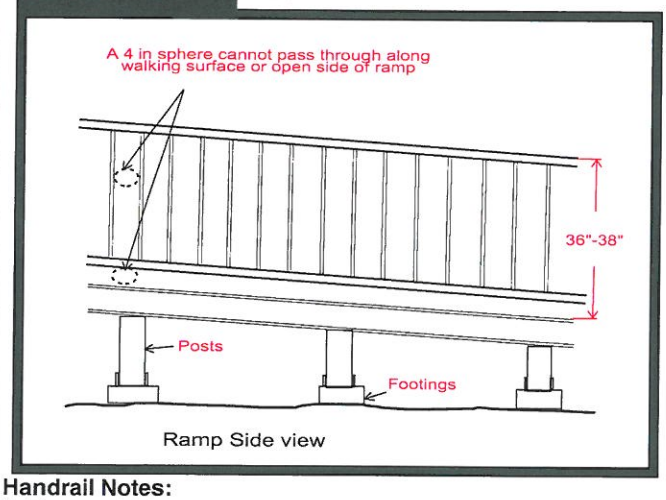

Detail C

❑

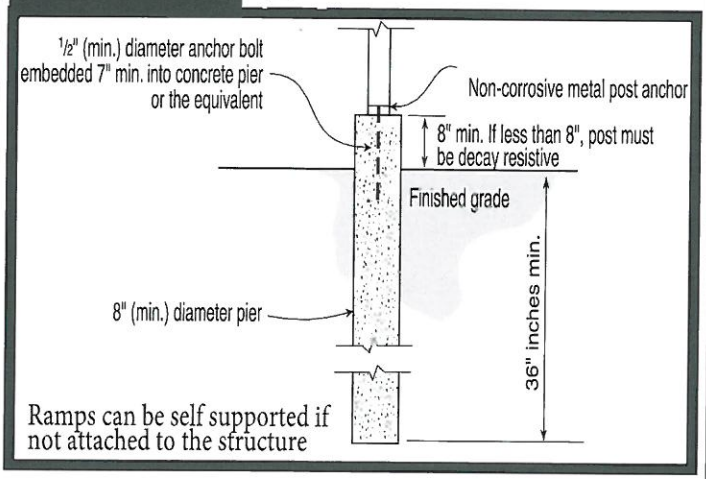

Handrail Notes:

1. Where provided handrails shall be continuous the full length of the ramp
2. Top of the handrails shall be placed not less than 34 inches nor more than 38 inches above ramp walking surface.Top rail of guard can also serve as a handrail with a height of 34-38 inches. Height of the handrail must be constant from beggining to end.
3. The handgrip portion of handrails shall be not less than 1-1/4 inches nor more than 2 1/4 inches in cross section for non circular handrails.
4. Handrails shall be placed not less than 1-1/2 inches from any wall or other surface.
5. Handrails to be returned to wall, post or safety terminal (per 311.7.8.2 IRC)

Acceptable Handrail Details

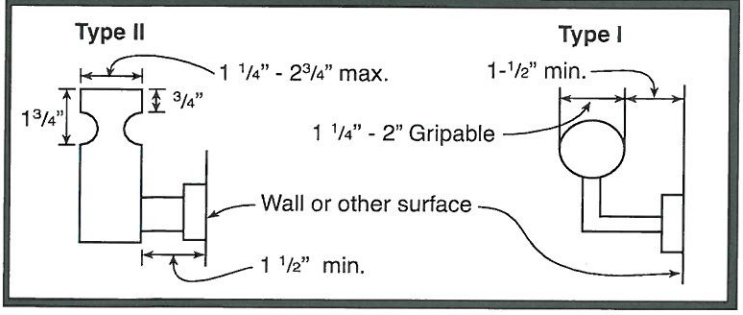

Unacceptable Handrails

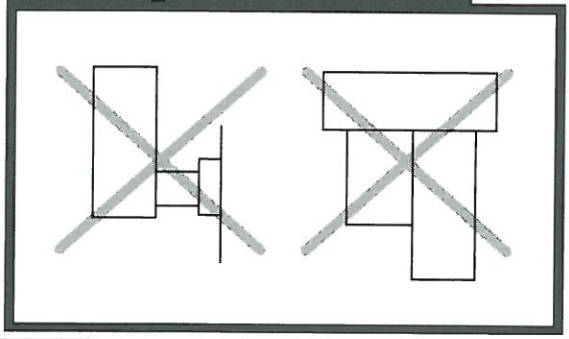

This handout was developed by the Colorado Chapter of the International Code Council as a basic plan submittal under the 2015 International Residential Code. It is not intended to cover all circumstances. Check with your Department of Building Safety for additional requirements.